KINGSLEY HAND SHOWER SET

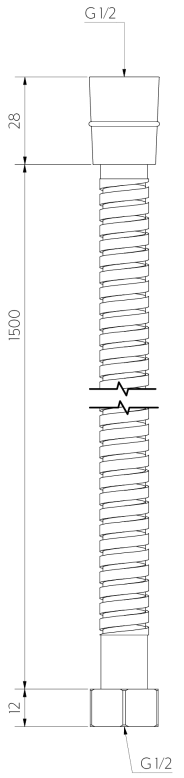

Shower Hose Side View

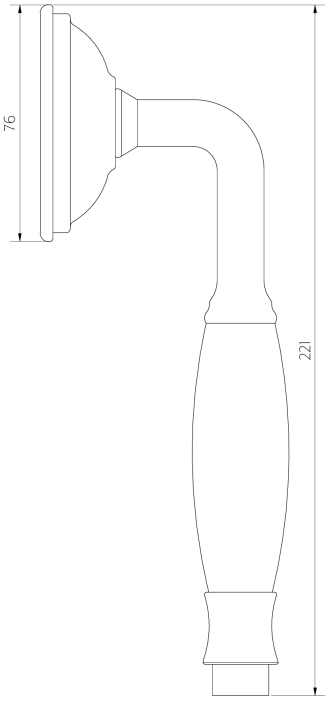

Hand Shower Side View

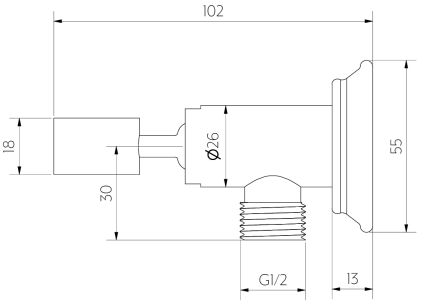

BP Side View

Note: Dimensions are nominal measurements only

SPECIFICATIONS

RECOMMENDED USE	Domestic/Commercial
BOX	Box 1: Kingsley Hand Shower Box 2: Kingsley Hand Shower Holder & BP Box 3: Shower Hose

Disclaimer: Products in this manual must by law be installed by licensed and registered tradespeople in accordance with the relevant standards. ABI and the manufacturer/distributor reserve the right to vary specifications or delete models from their range without prior notification. Dimensions are nominal measurements only. The information listed is correct at the time of publication, however ABI and the manufacturer/distributor takes no responsibility for printing errors. Copyright © ABI Interiors 2024 Pty Ltd

KINGSLEY HAND SHOWER

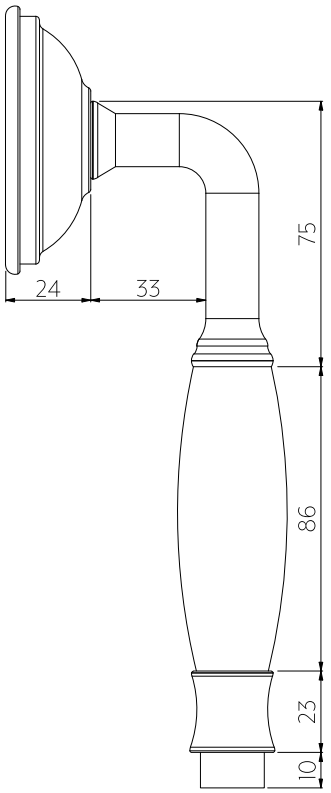

Side View

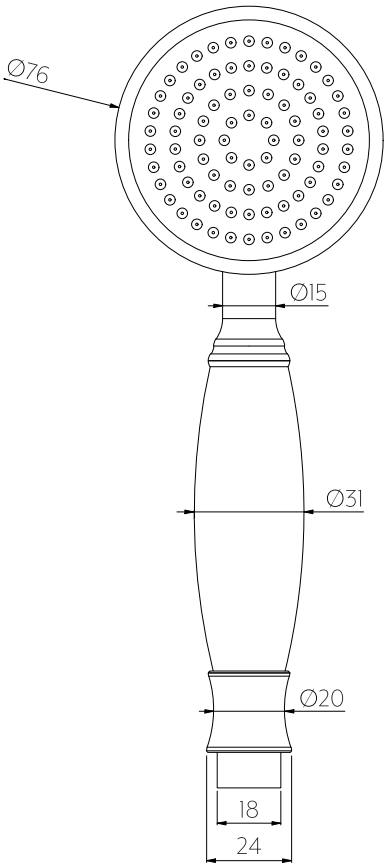

Front View

Note: Dimensions are nominal measurements only

SPECIFICATIONS

RECOMMENDED USE	Domestic
MATERIAL	Solid Brass
TEMPERATURE RATING	Maximum continuous working temperature 75°C If the water temperature exceeds 75°C,an approved tempering valve must be fitted

Disclaimer: Products in this manual must by law be installed by licensed and registered tradespeople in accordance with the relevant standards. ABI and the manufacturer/distributor reserve the right to vary specifications or delete models from their range without prior notification. Dimensions are nominal measurements only. The information listed is correct at the time of publication, however ABI and the manufacturer/distributor takes no responsibility for printing errors. Copyright © ABI Interiors 2024 Pty Ltd

INSTALLATION GUIDE

Note: This product must be installed by a licensed plumber. This is a general installation guide - there are many factors involved that can alter the installation method. **AU/NZ:** For installations within Australia and New Zealand, this product must be installed in compliance with AS/NZS 3500. **UK:** For installations in the United Kingdom this product must be installed in compliance with the Water Supply (Water Fittings) Regulations and Water Supply (Water Fittings) (Scotland) Byelaws. **Other:** For installations outside these countries, this product must be installed in compliance with the standards in your respective country.

STEP ONE: Ensure flat washer is fitted inside the hose end.

STEP TWO: Connect the swivelling cone end of hose in a clockwise direction onto the Provincial Hand Shower and hand tighten

Note: Please take care not to damage the flow controller whilst connecting.

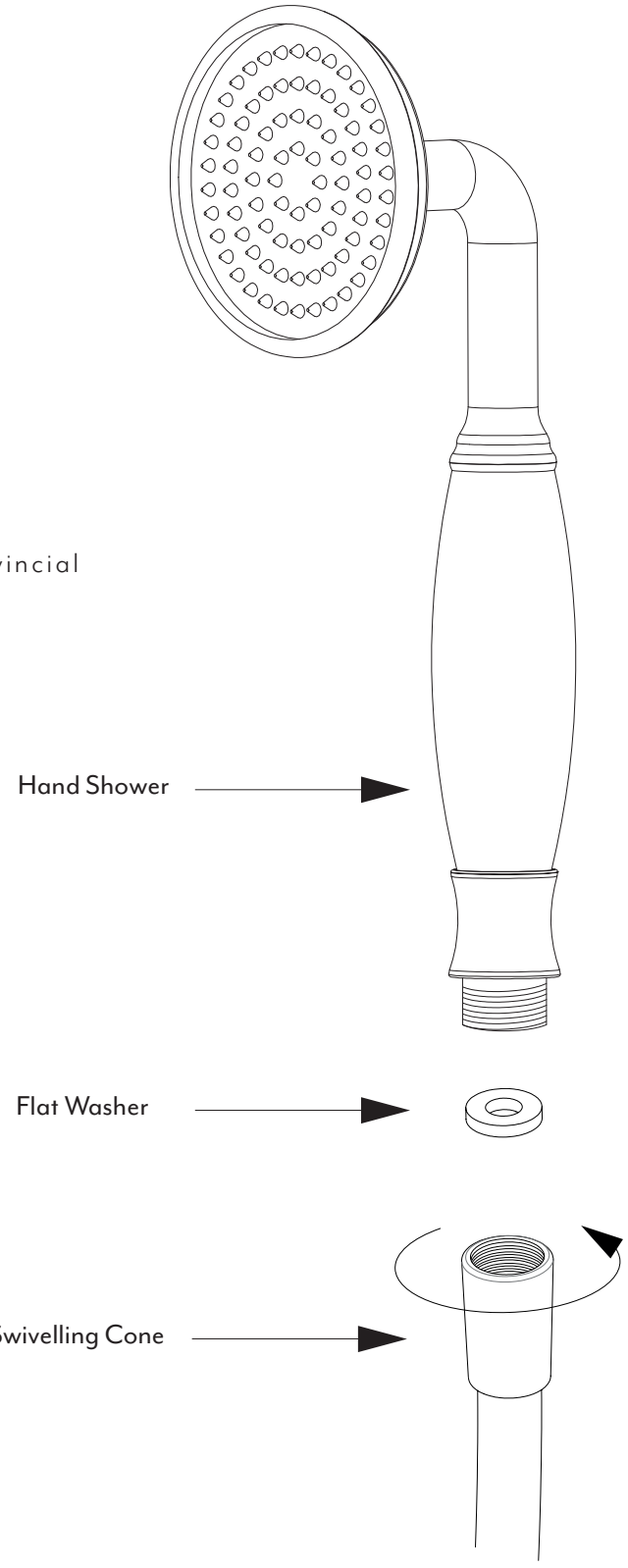



Regularly clean with mild liquid detergent or soap and water.



DO NOT use cream cleaners or bleach. These substances are abrasive.



DO NOT use cleaning pads with abrasive surfaces as this may scratch the material.

KINGSLEY HAND SHOWER HOLDER & BP

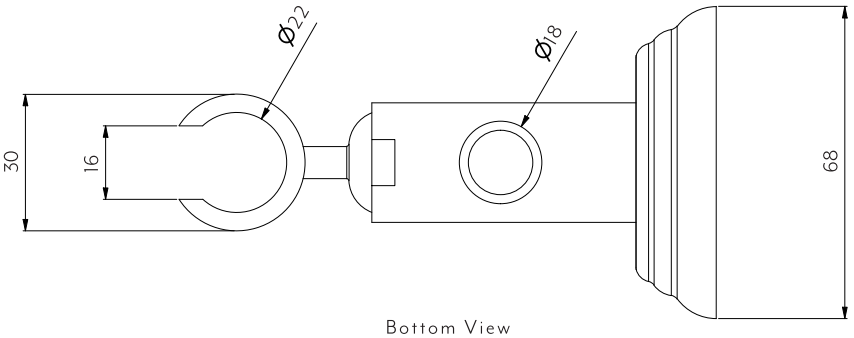

Bottom View

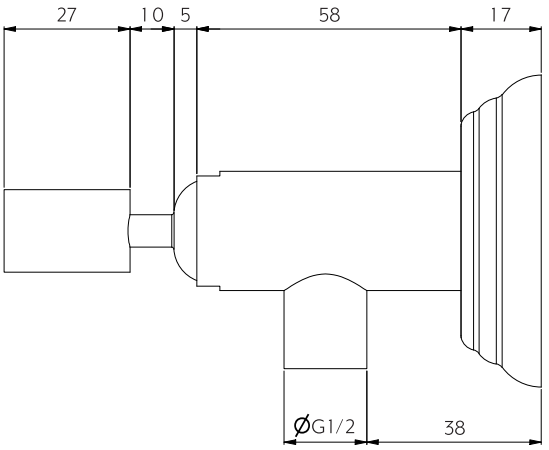

Side View

Note: Dimensions are nominal measurements only

SPECIFICATIONS

RECOMMENDED USE	Domestic
MATERIAL	Solid Brass
TEMPERATURE RATING	Maximum continuous working temperature 75°C If the water temperature exceeds 75°C,an approved tempering valve must be fitted

Disclaimer: Products in this manual must by law be installed by licensed and registered tradespeople in accordance with the relevant standards. ABI and the manufacturer/distributor reserve the right to vary specifications or delete models from their range without prior notification. Dimensions are nominal measurements only. The information listed is correct at the time of publication, however ABI and the manufacturer/distributor takes no responsibility for printing errors. Copyright © ABI Interiors 2024 Pty Ltd

INSTALLATION GUIDE

This product must be installed by a licensed tradesperson.
This is a general installation guide - there are many factors that are involved that can alter the installation method. This product install must comply with the standards in your respective country and must be adhered to by your licensed tradesperson.

1. Slide back plate onto BP Body. Ensure o ring is firmly gripping the spout and creating a tight seal.

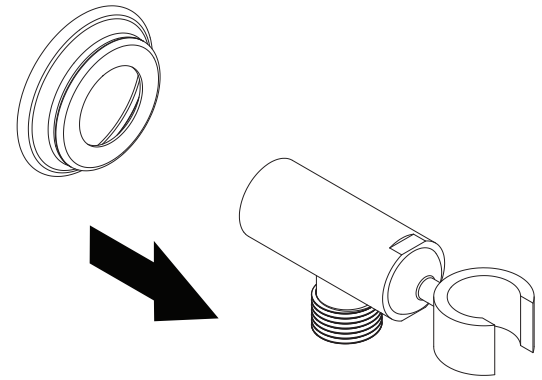

2. Apply the teflon tape to the brass outlet pipe. Twist the BP on and hand tighten. Push back plate to the wall surface.

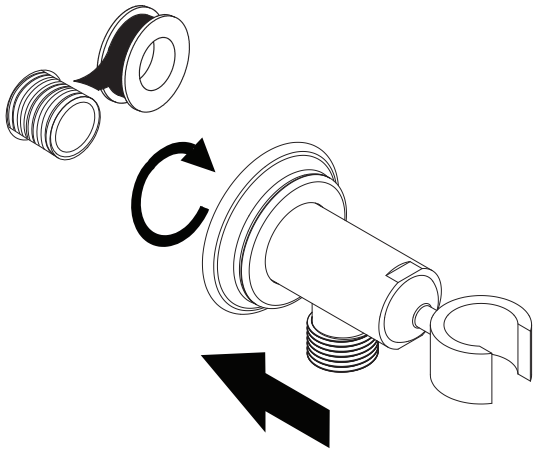

IN THE BOX



1x Back plate

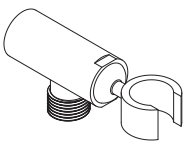

1x BP Body



Regularly clean with mild liquid detergent or soap and water.



DO NOT use cream cleaners or bleach. These substances are abrasive.



DO NOT use cleaning pads with abrasive surfaces as this may scratch the material.

SHOWER HOSE

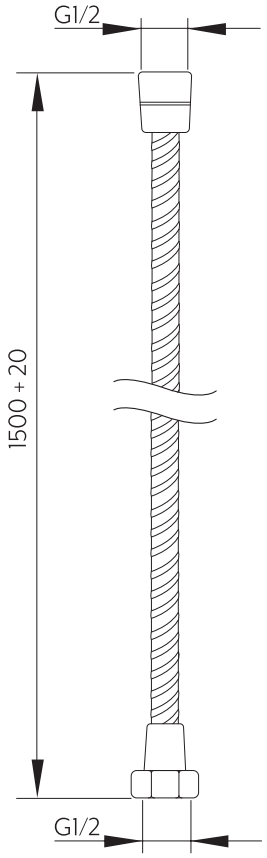

Note: Dimensions are nominal measurements only

SPECIFICATIONS

RECOMMENDED USE	Domestic
MATERIAL	Solid Brass
TEMPERATURE RATING	Maximum continuous working temperature 75°C If the water temperature exceeds 75°C,an approved tempering valve must be fitted

Disclaimer: Products in this manual must by law be installed by licensed and registered tradespeople in accordance with the relevant standards. ABI and the manufacturer/distributor reserve the right to vary specifications or delete models from their range without prior notification. Dimensions are nominal measurements only. The information listed is correct at the time of publication, however ABI and the manufacturer/distributor takes no responsibility for printing errors. Copyright © ABI Interiors 2024 Pty Ltd