ASSEMBLY BENCH MOUNTED BREECH WITH SPINDLES

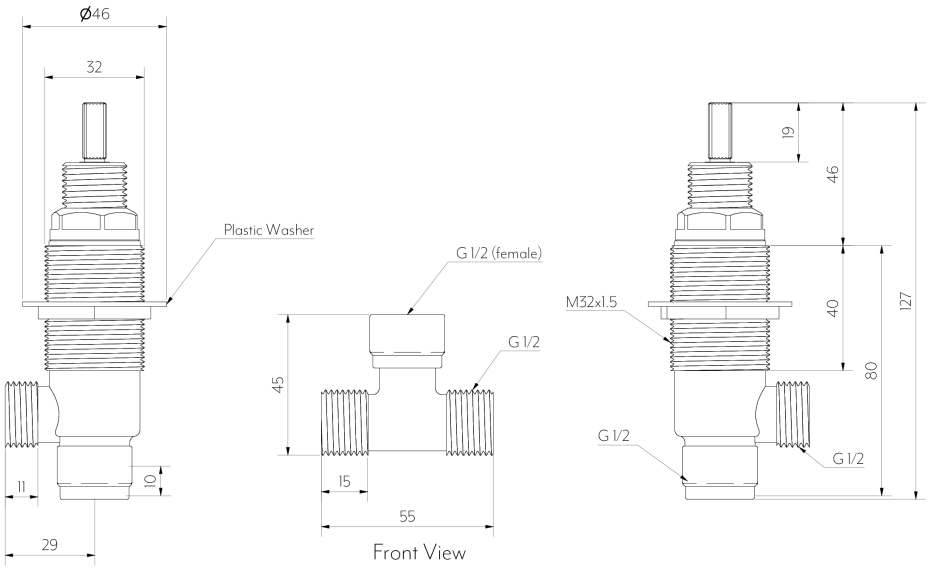

Note: Dimensions are nominal measurements only

SPECIFICATIONS

RECOMMENDED USE	Domestic
MATERIAL	Solid Brass

Disclaimer: Products in this manual must by law be installed by licensed and registered tradespeople in accordance with the relevant standards. ABI and the manufacturer/distributor reserve the right to vary specifications or delete models from their range without prior notification. Dimensions are nominal measurements only. The information listed is correct at the time of publication, however ABI and the manufacturer/distributor takes no responsibility for printing errors. Copyright © ABI Interiors 2024 Pty Ltd

INSTALLATION GUIDE

Note: This product must be installed by a licensed plumber. This is a general installation guide - there are many factors involved that can alter the installation method. **AU/NZ:** For installations within Australia and New Zealand, this product must be installed in compliance with AS/NZS 3500. **UK:** For installations in the United Kingdom this product must be installed in compliance with the Water Supply (Water Fittings) Regulations and Water Supply (Water Fittings) (Scotland) Byelaws. **Other:** For installations outside these countries, this product must be installed in compliance with the standards in your respective country.

ABI INTERIORS

1. Plan out your handle locations in relation to your spout and drill Ø32mm holes for the handles.

   *Flexi hoses are not included in the box. Purchase based on distance from handles to spout.

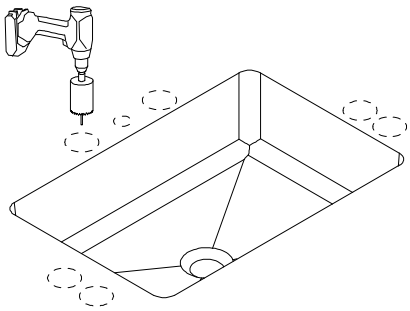

2. The spindles come pre-installed into the breech body. If any adjustment is needed the order of assembly can be seen below.



3. Install the breech into the bench, securing from the top with your chosen handle kit base plate. Install the spout into the bench with the provided fixings.

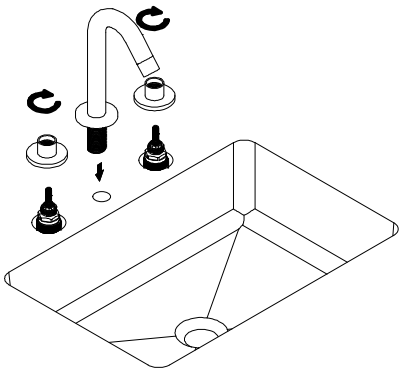

4. Secure spout to T piece with slip nut.
   Connect water outlets to breech.
   Connect breech pieces to spout.
   *Ensure not to kink flexi hoses.

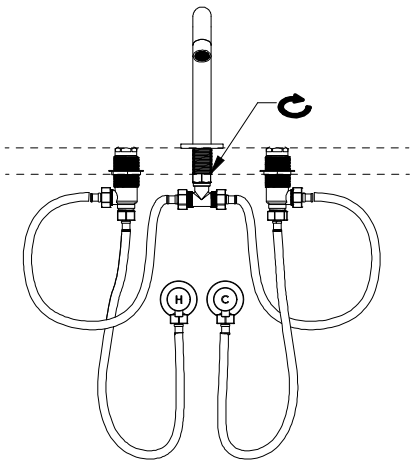

5. Continue installing the handle kit of your choice. See following page for handle kit fit off.
   Test and Commision.

In the Box					
					
2x Breech body & Spindle set	1x T-Piece	2x Plastic washer	2x Locking nut	2x Plastic olive	2x Olive nuts



Regularly clean with mild liquid detergent or soap and water



DO NOT use cream cleaners or bleach. These substances are abrasive

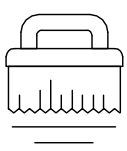

DO NOT use cleaning pads with abrasive surfaces as this may scratch the material